EN

Operating Instructions

Stud welding device **BMS-9 ACCU**

Stud welding gun **PS-9K ACCU**

CE

EN

soyer®

Device numbers

We recommend to enter the device numbers in the list so that they can be accessed quickly if servicing is required.

Device	Type	Serial number
Stud welding device	BMS-9 ACCU	
Battery	BMS-9 ACCU	
Stud welding gun	PS-9K ACCU	

Operating Instructions

Document no.: P00162, 04-2019, translation of the original instructions

(English: P00262)

Revision status

Document	created/amended	Editor	Date
Original	Created - rev.1	DD	03/05/2019

CONTENTS

1. General information 5

1.1. Validity of the operating instructions 5

1.2. Declarations of conformity 5

1.3. Manufacturer 7

1.4. Instruction, training 7

1.5. Standards and directives 7

2. Important safety instructions 8

2.1. Warning signs used 8

2.2. General safety instructions 9

2.3. Personal protective equipment 12

2.4. Intended use of the stud welding device 13
2.4.1 Incorrect use 13

2.5. Intended use of the stud welding guns 13
2.5.1 Incorrect use 13

2.6. Operating company prerequisites 14
2.6.1 Prerequisites for personnel 14

3. Important safety instructions for battery operation 15

4. Transport 18

5. Storage, shutdown 18

6. Disposal 18

7. Description of the BMS-9 ACCU stud welding device 19

7.1. Working method 19
7.1.1 Product features 20
7.1.2 Capacitor discharge stud welding 20

7.2. Overview of the controls 21
7.2.1 Displaying the operating states 22
7.2.2 Indication of the battery charging status on the device display 23

7.3. Charging and inserting the battery 24

7.4. Technical data of the BMS-9 ACCU stud welding device 28

7.5. Permitted stud welding guns 30

7.6. Cleaning the stud welding device 30

CONTENTS

8. Description of the PS-9K ACCU stud welding gun 32

8.1. Technical data of the PS-9K ACCU stud welding gun 33

8.2. Cleaning of the stud welding gun 34

9. Description of the stud chuck. 35

9.1. Adjusting and inserting the adjustable stud chucks 35

10. Setup and connection 39

10.1. Requirements for the installation location 39

10.2. Connection of the stud welding device and the stud welding guns 40
10.2.1 Power supply 40
10.2.2 Switching the device on and off 40
10.2.3 Connecting the earth cable 40
10.2.4 Connecting the stud welding gun 42

11. Settings 43

11.1. Adjusting the charging voltage on the stud welding device 43

12. Welding operation 45

12.1. Carrying out welding 45

12.2. Notes on checking the quality of the weld 46
12.2.1 Visual inspection 46

12.3. Welding defects and their causes 48

12.4. Malfunctions with an error message 49

13. Maintenance and repair 50

14. Service 50

15. Warranty conditions 51

1. General information

These operating instructions include important instructions and provisions for the operation of the devices. Please keep the operating instructions at hand near the devices.

In these operating instructions, the term “devices” refers to the stud welding device and the stud welding gun.

Carefully read the operating instructions and any other documents contained in the technical documentation. Pay particular attention to the safety instructions which are intended to help you recognise any possible residual risks and prevent hazards.

The drawings and illustrations in these operating instructions are for illustrative purposes and may vary slightly from the actual equipment.

The manufacturer reserves the right to make technical changes.

1.1 Validity of the operating instructions

These operating instructions apply to the following devices:

Stud welding device	BMS-9 ACCU
Stud welding gun	PS-9K ACCU

1.2 Declarations of conformity

The devices are designed and constructed in accordance with the general accepted codes of practice.

Please note that significant changes to the device will cause the declaration of conformity to become void.

Furthermore, the manufacturer's warranty may be rendered invalid.

Stud welding device

Heinz Soyer Bolzenschweißtechnik GmbH
Inninger Straße 14
82237 Wörthsee

CE - Declaration of Conformity

We herewith declare that the design of the machine described below as well as in the version marketed by us meets the safety and health requirements of the stated guidelines and standards. Any modification of this machine without confirmation shall automatically annul this declaration.

Designation of the machine	**Stud welding device**
Machine type	**BMS-9 ACCU**
Machine no.	_____
Applicable EU guidelines	RoHS directive (2011/65/EU) Low-voltage directive (2014/35/EU) EMC directive (2014/30/EU)
Harmonised standards applied, in particular	EN 60974-1:2012 EN 60974-10:2008
National regulations applied	DGUV directive 1
Date	29 March 2019
Manufacturer - signature	_____
Function of the signatory	CEO

1.3 Manufacturer

The manufacturer of the devices is:

Heinz Soyer Bolzenschweißtechnik GmbH

Inninger Straße 14

82237 Wörthsee

Phone: 0049-8153-885-0

Fax: 0049-8153-8030

Mail: info@soyer.de

Web: www.soyer.de, www.soyer.com

1.4 Instruction, training

Soyer offers optional and individual instruction in the operation of the devices.

Moreover, Soyer offers training for customer-specific use of the devices. The tutorial is available at:
https://youtu.be/QrYjCVNdRZk.

Information on the scope and costs of instruction and training can be obtained from Soyer GmbH.

Also see our video instructions at

www.youtube.com/user/SoyerGmbH.

1.5 Standards and directives

The following standards, inter alia, must be observed for carrying out stud welding work and for the qualification of personnel:

- DIN EN ISO 14555 Welding - Arc stud welding of metallic materials
- DIN EN ISO 14732 Welding personnel - Qualification testing of welding operators and weld setters for mechanised and automatic welding of metallic materials
- DIN EN 60974-9 Arc welding equipment - Installation and use
- Technical Bulletin DVS 0903 Capacitor-discharge stud welding with tip ignition
- Technical Bulletin DVS 0904 Instruction for practice - Arc stud welding

2. Important safety instructions

Read the following chapters carefully and follow the safety instructions. Please contact the manufacturer if you are uncertain or an instruction cannot be followed.

The devices have been constructed in accordance with the generally accepted codes of practice and established and usual safety requirements were observed and applied. In order to reach maximum safety, it is absolutely necessary to follow and observe all safety instructions specified in these operating instructions.

2.1 Warning signs used

Warning signs are used in this document, depending on the potential danger of the situation.

Safety and information symbols used in this manual	
DANGER	This warning sign indicates imminent danger leading to severe injuries or death.
WARNING	This warning sign indicates a potentially dangerous situation that may lead to severe injuries or death.
CAUTION	This warning sign indicates a potentially dangerous situation that may lead to minor injuries. Without the warning triangle, this warning sign is also used in the event of danger of material damage.
	Additional sign indicating danger from electric current. The additional sign is used in connection with a warning.
	Additional sign indicating the danger of burns. The additional sign is used in connection with a warning.
	Do not touch the surface or the housing: Shock hazard.
	Do not touch or open, danger to unauthorised persons.
	Danger to persons with medical implants such as pacemakers.
	The information sign is not a warning sign. It indicates important and useful information on the subject.

Safety instructions on the device

As an additional warning of danger, warning labels can be found on the devices. Warning labels are affixed by the manufacturer and must not be removed. If a warning label is damaged and thus illegible, a new warning label must be affixed immediately.

Warning labels must be obtained from the manufacturer.

2.2 General safety instructions

DANGER

Danger from electric current, general information

When working on live components, there is a danger to life from electric current.

- Work on electric or electronic components may only be performed by trained electrotechnical personnel in accordance with currently applicable electrotechnical regulations.
- Protection devices must not be manipulated or disabled. Protection devices include, for example, housing and housing cover, fuses or power switches.
- If protection devices have to be removed for maintenance work, the device may only be switched on again when all protection devices are installed and their functionality has been checked.
- Starting the device with faulty protection devices is not permitted. Faulty protective devices must be repaired or replaced immediately. Unintentional operation by third parties must be prevented.

DANGER

Danger from electric current during maintenance and repair work

When working on live components, there is a danger to life from electric current.

- Work on electric or electronic components may only be performed by trained electrotechnical personnel of Soyer Bolzenschweißtechnik.
- Before performing any work on the stud welding device, the mains switch of the device must be turned off and the mains plug must be disconnected. The battery of battery-operated devices must be removed.
- Before performing any work on the stud welding gun, the supply cables to the stud welding device must be disconnected.
- If protection devices have to be removed for maintenance work, the device may only be switched on again when all protection devices are installed and their functionality has been checked.

DANGER

Danger from magnetic fields

In the area surrounding the device, strong magnetic fields which may influence medical auxiliary devices and therefore result in danger to life occur during the welding process.

- Persons with electric medical aids (e.g. pacemakers) must stay away from the devices.
- The operating personnel must ensure that persons with medical aids stay away from the devices.

DANGER

Danger of explosion from inappropriate operation sites in explosive areas

The device is not designed for use in explosive areas.

- The device must not be installed and operated in explosive areas.

⚠ CAUTION

Danger of burns from hot surfaces

During the welding process, the workpieces and some parts of the welding gun get so hot that touching them may cause burns.

- Always use personal protective equipment.
- Before working on hot parts of the device, check if they have cooled down.

⚠ WARNING

Danger of burns from hot welding spatters

During the welding process, dangerous welding spatters may occur.

- Always use personal protective equipment.

⚠ WARNING

Danger of fire from hot welding spatters

Welding spatters or hot workpieces occurring during the welding process may cause danger of fire.

- Do not store combustible or highly flammable materials in the welding area.

2.3 Personal protective equipment

It is recommended to wear personal protective equipment when working with the stud welding device.

WARNING

Danger from missing or incorrect personal protective equipment

Stud welding may lead to danger of burns, especially due to hot welding spatters. Danger of blinding may also arise due to the occurrence of strong arcs.

- Always wear suitable and closed protective clothing.
- Type and extent of the required protective equipment depend on the respective occurrence of welding spatters and/or arcs. Both occurrences vary, depending on the basic material, stud material, stud size and the required welding performance.
- Please observe the following instructions for protective equipment.

Recommended personal protective equipment	
	Safety goggles Welding spatters and a flash occur during the welding process. In order to protect your eyes, wear appropriate safety goggles with side protection and a filter protector, if necessary.
	Protective gloves During the welding process, the workpieces and components of the welding gun get hot and welding spatters occur. Wear appropriate, incombustible, heat-resistant protective gloves.
	Protective clothing Welding spatters occur during the welding process. Wear appropriate, incombustible and, if necessary, heat-resistant protective clothing.
	Safety footwear Welding spatters occur during the welding process. Wear appropriate, incombustible, heat-resistant safety footwear.
	Hearing protection Relatively loud welding noises may occur, depending on the welding device and the welding application. In that case, wear appropriate hearing protection.

2.4 Intended use of the stud welding device

With the SOYER® BMS-9 ACCU capacitor discharge stud welding device, pins and threaded studs from M3 to M8 as well as many different weld fasteners made of steel, stainless steel, aluminium and brass can be welded in accordance with DIN EN ISO 13918 (capacitor discharge).

Special studs or diameters upon request.

The stud welding device can only be operated with the welding guns described in chapter “7.5 Permitted stud welding guns” on page 30.

The stud welding device must be operated within the scope of technical data.

2.4.1 Incorrect use

Any use of the device deviating from the intended use is considered as not intended.

Not intended use, unauthorised modification or manipulation of the device will void the declaration of conformity and warranty claims against the manufacturer.

2.5 Intended use of the stud welding guns

With the SOYER® stud welding guns which are described in these operating instructions, pins and threaded studs from M3 to M8 as well as many different weld fasteners made of steel, stainless steel, aluminium and brass can be welded in accordance with DIN EN ISO 13918 (capacitor discharge).

Special studs or diameters upon request.

The stud welding guns can only be operated with the stud welding devices which are described in chapter “8.1 Technical data of the PS-9K ACCU stud welding gun” on page 33.

The stud welding gun can only be operated within the scope of technical data.

2.5.1 Incorrect use

Every use of the welding gun deviating from the intended use is considered as not intended.

Not intended use, unauthorised modification or manipulation of the device will void the declaration of conformity and warranty claims against the manufacturer.

Misusing the gun as a tool, e.g. as a striking tool for checking the welding quality, is not permitted.

2.6 Operating company prerequisites

The operating company of the device must ensure that the prerequisites described in these operating instructions for a safe operation of the device are met.

These include, for example, conditions at the installation location, regulatory requirements on a safe workplace, instruction of operating personnel and qualified personnel in using the device, if applicable, compliance with required maintenance work as well as monitoring the intended use of the device.

These operating instructions must be stored in the vicinity of the device.

The operating company of the device must ensure that all protective devices are present, active and intact before the device is used.

2.6.1 Prerequisites for personnel

Operating personnel

Persons authorised to operate the device must be familiar with the device and trained accordingly. They must have read and understood these operating instructions. When working on the device, they must also be able to avert possible residual danger to themselves or third parties or minimise them as far as possible.

To retain this qualification, safety training must be carried out at least once a year. If necessary, specially trained personnel or the manufacturer must be consulted in case of failure or for maintenance work.

Operators of stud welding devices must have technical expertise for operating and adjusting the device properly as well as for properly carrying out weldings.

If welding personnel has to be qualified for certification of welding, the standards DIN EN ISO 14555 and DIN EN ISO 14732 are to be observed.

Trained electrotechnical personnel

In general: Works on live elements may only be performed by authorised electricians. This work must be performed in accordance with the applicable technical rules for electrotechnical devices.

All devices of Soyer Bolzenschweißtechnik GmbH must only be opened by personnel of Soyer or personnel authorised by Soyer.

3. Important safety instructions for battery operation

These operating instructions describe the operation of a stud welding device which is operated by a lithium-based high-performance battery.

The battery consists of several connected individual cells.

Due to the very high energy density and the technical design of these batteries, the batteries must be handled very carefully.

WARNING

Hazards due to improper battery handling

Improper handling and use of a battery may lead to electric shocks, skin irritations, chemical burns, fire or explosion.

- For safe handling and operation, the following instructions and recommendations must be strictly observed.

General safety information

- Do not disassemble, open or shred batteries.
- Store batteries out of the reach of children and unauthorised persons.
- Do not expose batteries to heat or fire. Avoid storage in direct sunlight.
- Do not short-circuit batteries.
- Do not store batteries in a hazardous manner in a box or drawer where they can short-circuit each other or can be short-circuited by other conductive materials.
- Do not expose batteries to mechanical impact.
- Only remove the battery from its original packaging right before it is used.
- If a cell is leaking, the fluid must not come into contact with the skin or the eyes. If contact has occurred, please rinse the affected area with plenty of water and consult a physician.
- Only use chargers which are especially designed for this type of battery.
- Always observe the polarity labels plus (+) and minus (-) on the batteries and devices. Proper use must be ensured.
- Do not use rechargeable batteries, cells or other batteries which are not designed for the use in combination with the device.
- If the connections of batteries are soiled, clean them using a dry, clean cloth.
- Keep batteries clean and dry at all times.
- Batteries must be charged before use. Always use the proper charger and observe the manufacturer’s instructions for correct charging.
- Do not charge batteries for an extended period if they are not used.
- Do not charge batteries at temperatures below 0 °C.
- The batteries may only be used in the SOYER® devices for which they are intended.

- If possible, batteries should be removed from devices, if the devices are not in use for several weeks.
- Never use or store batteries and devices with inserted battery in an explosive environment or in an environment with highly flammable substances.
- Ambient temperature during operation of the device: -20 °C to +50 °C.

Maintenance

- Regularly check whether the battery is in clean and dry condition.
- Use a clean and dry cloth to remove dirt.

Safe storage

- Always store batteries in a clean and dry place. Ideally store the batteries at room temperature as a maximum or in colder environments (e. g. fridge).
- Admissible temperature during storage: -20 °C to +60 °C (recommended: 0 °C to +20 °C).
- Do not store batteries in discharged condition. The residual capacity should be at least 50 - 80%.
- Check stored batteries every 2 - 3 months and charge them, if required, to prevent deep discharge which results in the destruction of the battery.

Handling of defective batteries and disposal

- Always dispose of batteries in an environmentally compatible way in accordance with applicable local provisions. Consult the local waste disposal company.
- Never dispose of batteries in household waste.
- Do not dispatch batteries. If a battery is defective, please contact co. Soyer.
- Do not touch any leaking fluid with bare hands. Collect the fluid and dispose of it in the correct manner. Wear goggles and protective gloves.

Dealing with battery malfunctions

Abnormal battery performance such as incorrect charging or unusually long charging times, noticeable sudden power loss, unusual LED messages or leaking fluids can indicate a battery defect.

- In case of obvious or suspected battery malfunctions, please consult the service of co. Soyer.

Measures in case of battery fire

- Do not touch the burning battery, not even with protective gloves. A burning battery is extremely hot due to plasma formation!
- In case of battery fire, remove all flammable objects around the burning battery and call the fire brigade, if required.
- Ensure sufficient ventilation to ensure that hazardous and explosive vapours can escape.
- In case of significant smoke development, please leave the room immediately.
- In case of respiratory tract irritation, consult a physician.
- Fight battery fire with water only. Powder extinguishers and fire blankets only serve to extinguish surrounding fires but are not an effective method to fight the battery fire.

4. Transport

When transporting the device, make sure that it cannot be damaged. Appropriate packaging can protect the device against weathering effects, especially moisture.

Do not dispatch the battery. Please observe chapter “3. Important safety instructions for battery operation” on page 15.

5. Storage, shutdown

During storage or shutdown, make sure to protect the device against dirt and humidity.

Protect the device against unauthorised access by third parties.

For the storage of the battery, please observe chapter “3. Important safety instructions for battery operation” on page 15.

6. Disposal

Local environmental directives must be observed when disposing of the device.

Water-endangering as well as environmentally hazardous substances are to be disposed of in accordance with legal regulations.

If applicable, materials must be separated according to regulations.

For the disposal of the battery, please observe chapter “3. Important safety instructions for battery operation” on page 15.

7. Description of the BMS-9 ACCU stud welding device

The main elements of the stud welding device and its features are described in the following.

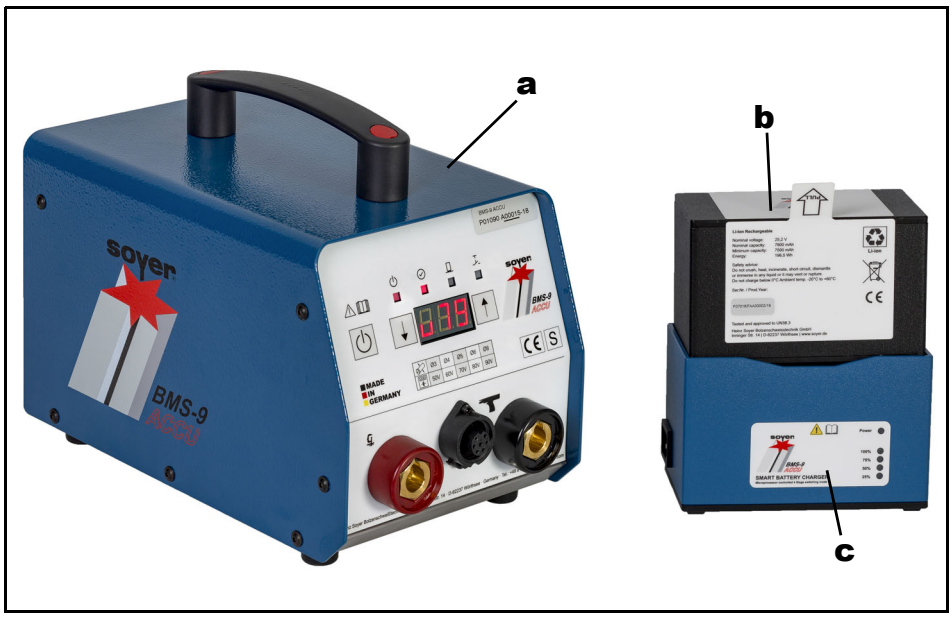

Figure 1: BMS-9 ACCU stud welding device

Item	Designation
a	BMS-9 ACCU stud welding device
b	Battery
c	Battery charger

7.1 Working method

The welding capacitors with a capacity of 200 Millifarad are charged with up to 99 V using the energy from the battery (24 V). The charging unit corresponds to a state-of-the-art inverter power source. The welding power is output exclusively by the welding capacitors.

With the SOYER® BMS-9 ACCU stud welding device, pins and threaded studs from M3 to M8 as well as many different weld fasteners made of steel or stainless steel can be welded in accordance with DIN EN ISO 13 918 (capacitor discharge).

Welding of weld fasteners made of aluminium and brass is also possible.

7.1.1 Product features

- Power supply via high performance battery
- Inverter switching power supply for maximum welding power
- High performance with a compact design and a low weight
- Automatic storage of the charging voltage
- Short charging cycles to increase productivity
- Precise digital display of the charging voltage
- Monitoring of all functions via a clear function display field

7.1.2 Capacitor discharge stud welding

The SOYER® BMS-9 ACCU stud welding device operates according to the principle of capacitor discharge with tip ignition.

This system uses the sudden discharge of a capacitor bank to generate arc energy.

Functional principle

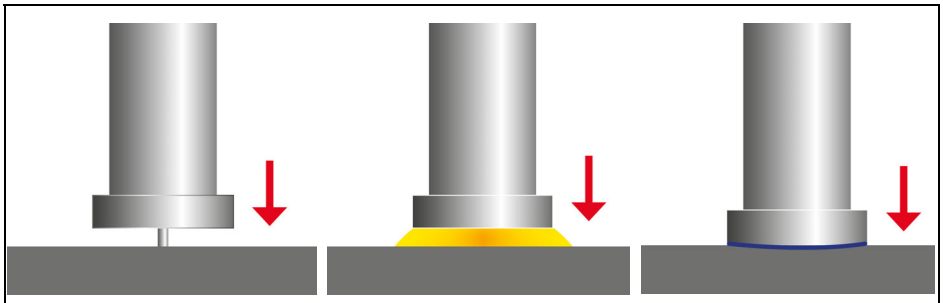

The stud tip is placed into contact with the workpiece.	The ignited arc creates a melt zone on the stud and the metal sheet.	The stud is immersed in the weld pool. The material solidifies and the stud is permanently welded.

For more information on this subject, please visit: www.soyer.com.

7.2 Overview of the controls

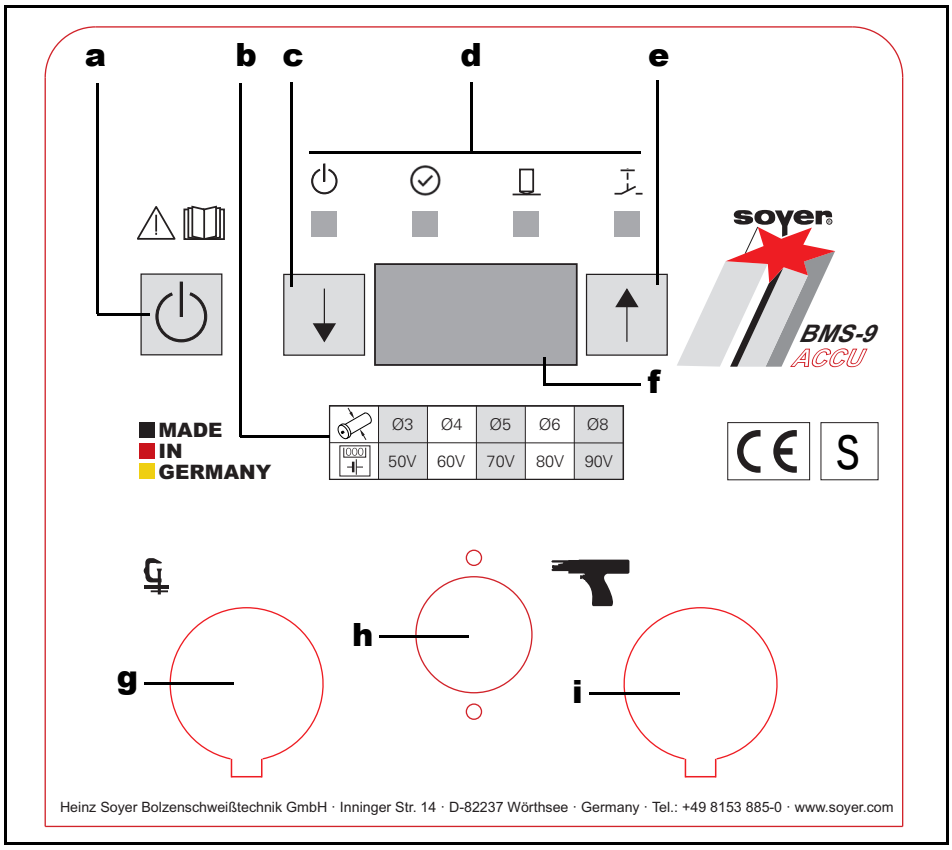

Figure 2: Overview of the front panel

Item	Designation
a	Power button for turning the device on/off
b	Selection table with reference values for easy matching of the required charging voltage to the stud diameter.
c	Function key, reduce displayed charging voltage
d	Display of operating states, see chapter “7.2.1 Displaying the operating states” on page 22.
e	Function key, increase displayed charging voltage
f	Display
g	Socket for the connection of the earth cable
h	7-pin connection socket for the control cable
i	Socket for the connection of the welding cable

7.2.1 Displaying the operating states

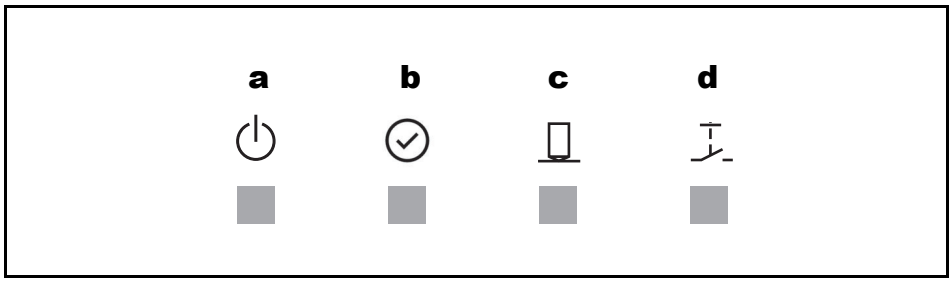

Figure 3: Operating states

Item	Designation
a	**Ready** In normal operation, the LED lights up when the stud welding device is ready for operation in normal mode. When the LED flashes, the device is in standby mode to save battery power. When the gun is operated, the device starts up again.
b	**Indication of the charging voltage** The LED lights up as soon as the set charging voltage has been reached. After the welding process, the LED is off.
c	**Stud on workpiece** The LED lights up when the earth terminal is connected and the stud touches the workpiece.
d	**Release** The LED lights up when the trigger button on the welding gun is pressed.

7.2.2 Indication of the battery charging status on the device display

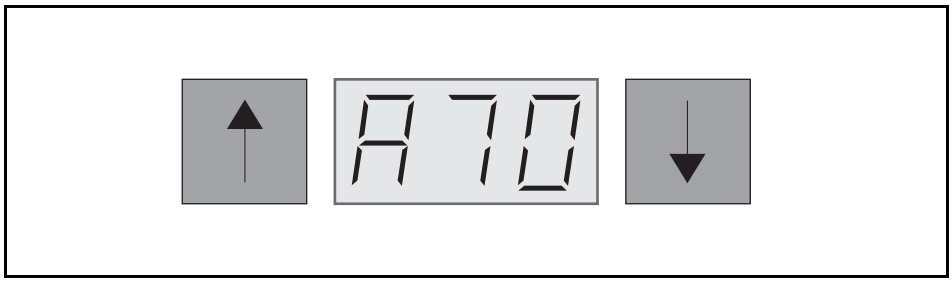

Figure 4: Indication of the battery charging status (70% in the example)

On the device display, the charging status of the battery is displayed.

It is displayed as a capital “A” followed by the charging status in percent.

You see this when you switch on the device directly after the charging voltage (which is displayed as a small “u” followed by the voltage in volt).

7.3 Charging and inserting the battery

The BMS-9 ACCU is operated exclusively by a battery. Please ensure that the device battery is always charged and ready for operation.

To charge the battery, you need the dedicated original charger (SOYER® article number F07051/FA).

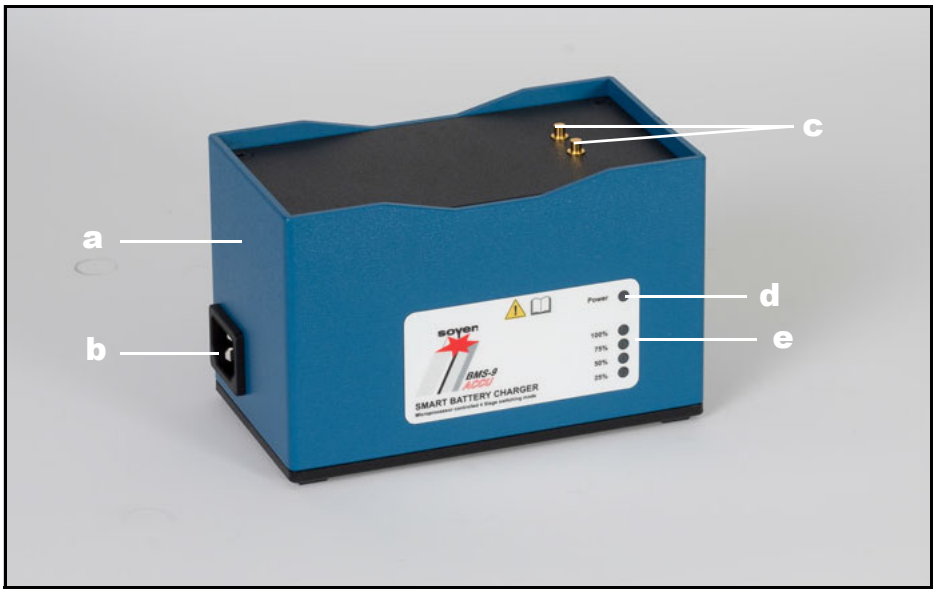

Figure 5: Charger

Item	Designation
a	Charger
b	Connection socket for the mains cable.
c	Charging contacts for the battery.
d	The Power LED is illuminated if the charger is connected to the mains.
e	Charging status indicators for the current charging status of the battery.

Removing, charging and inserting the battery

Step 1:	To remove the battery, pull the cover up to open it.  
Step 2:	Pull out the battery. 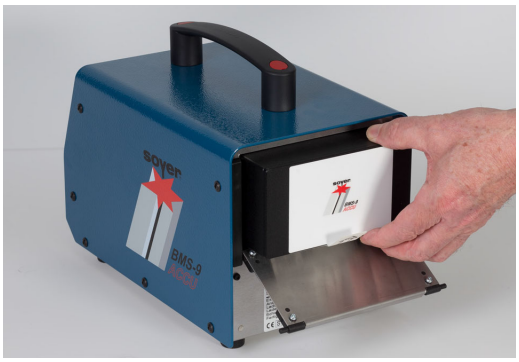

Removing, charging and inserting the battery

Step 3:	Place the battery on the charging station. Ensure that the battery is positioned correctly on the charging contacts (a). 
Step 4:	Charge the battery until the charging status indicator 100% (a) of the charger is illuminated. 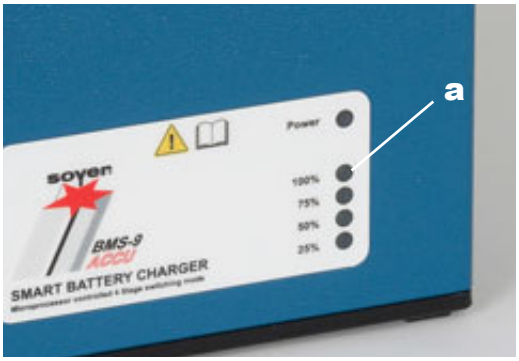 **Remove the battery from the charger when it is fully charged. The charger is not suitable as a permanent storage location for the battery.**

Removing, charging and inserting the battery

Step 5:	Push the charged battery into the device to the stop. Ensure correct orientation so that the device contacts can engage with the battery. If the labelling on the battery is properly oriented to be read (a), the position is correct.  **If the battery cannot be pushed completely into the device, check the orientation and the contacts.**
Step 6:	Close the cover. 
The exchange of the battery is complete.	

7.4 Technical data of the BMS-9 ACCU stud welding device

Stud welding device:

Designation	BMS-9 ACCU stud welding device
Welding procedure	Capacitor discharge stud welding
Standard gun	PS-9K ACCU
Welding area	M3 - M8 or Ø 3 - 8 mm for steel, stainless steel, aluminium and brass (aluminium and brass limited, depending on the respective requirements)
Power source	Capacitor bank 200,000 µF
Charging voltage	40 - 99 V infinitely variable up/down
Welding sequence	Ø 6 mm: 10 studs/min Ø 3 mm: 20 studs/min
Power supply	Battery
Cooling method	S, or passive by convection
Protection class	IP 23
Dimensions	180 x 235 x 300 mm (w x h x d)
Weight approx.	7.2 kg with inserted battery
Colour	RAL 5009 azure blue
Subject to technical changes	

Battery charger:

Designation	Battery charger for BMS-9 ACCU
Mains connection	Wide-range power supply 100 - 240 V, 50/60 Hz
Power output	28.8 V, 2 A
Protection class	IP 30
Dimensions	83 x 96 x 152 mm (w x h x d)
Weight approx.	0.5 kg including mains cable
Colour	RAL 5009 azure blue
Article number	F07051/FA
Subject to technical changes	

Battery:

Designation	Battery for BMS-9 ACCU stud welding device
Type	Lithium-ion
Rated voltage	25.2 V
Rated capacity	7800 mAh
Minimum capacity	7500 mAh
Energy	196.5 Wh
Dimensions	89 x 77 x 142 mm (w x h x d)
Weight approx.	1.2 kg
Colour	RAL 5009 azure blue
Article number	F07016/FA
Subject to technical changes	

Please also observe chapter “3. Important safety instructions for battery operation” on page 15.

7.5 Permitted stud welding guns

Permitted stud welding gun: PS-9K ACCU

WARNING

Hazards due to wrong gun

Hazards for the operator may occur when a wrong welding gun is used.

- Only use welding guns hereinafter permitted by Soyer.

The use of other guns or guns from another manufacturer will invalidate the declarations of conformity and warranties of Soyer.

7.6 Cleaning the stud welding device

DANGER

Dangers during cleaning

Improper cleaning of the stud welding device can endanger personnel.

- The device may only be cleaned by trained specialists.
- Before any cleaning work is done, the stud welding device must be disconnected from the main power supply and secured against accidental switch-on. The battery of battery-operated devices must be removed.
- Work on electrical devices and components may only be performed by skilled electricians in accordance with electrotechnical regulations.
- Make sure that no liquids get into the device.

Do not use aggressive detergents for cleaning the device.

Please make sure that any cleaning waste is disposed of in an environmentally safe manner. Please observe the instructions of the detergent manufacturer.

CAUTION

Damage to the device due to incorrect cleaning

Incorrect cleaning may cause damage to the device.

- Make sure that no liquids get into the device.
- Do not use aggressive detergents for cleaning the device.

The frequency of cleaning depends on the operating conditions of the stud welding device.

8. Description of the PS-9K ACCU stud welding gun

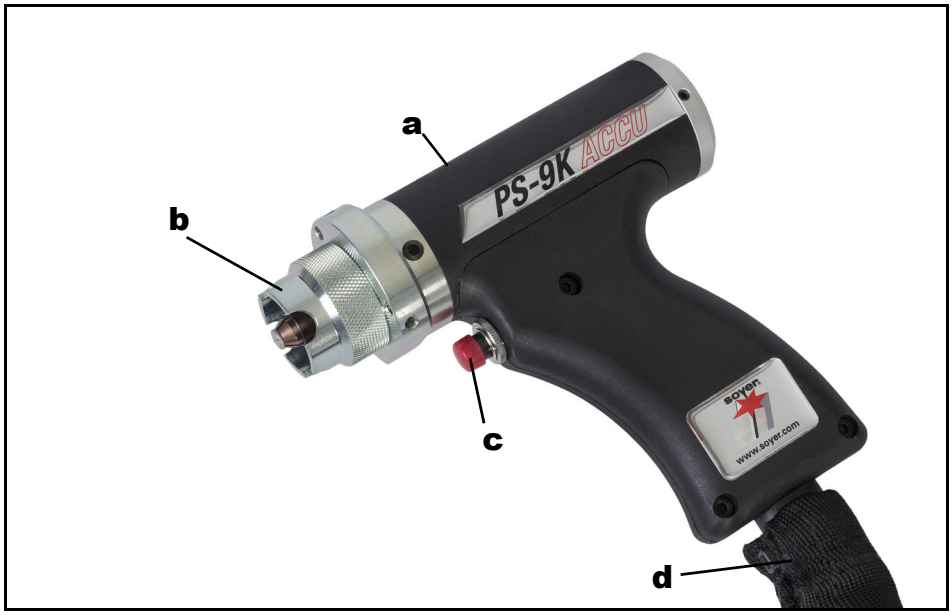

Figure 6: PS-9K ACCU stud welding gun

Item	Designation
a	PS-9K ACCU stud welding gun, contact gun without lifting magnet
b	Support tube
c	Release button
d	Power and control cable for connection with the stud welding device.

Due to a projection on the support tube and a spring in the gun, the stud of this gun is pressed firmly to the workpiece (contact gun).

The stud is not lifted before welding.

The PS-9K ACCU stud welding gun may only be operated with the stud welding devices specified in the technical data.

8.1 Technical data of the PS-9K ACCU stud welding gun

Technical data of the PS-9K ACCU stud welding gun

Designation	PS-9K ACCU stud welding gun (contact gun)
Item no.	P02162
Welding procedure	Capacitor discharge stud welding
Stud diameter	M3 - M8
Stud chuck	Adjustable
Stud length	Adjustable stud chuck up to a maximum of 35 mm Longer stud lengths with optional accessory possible
Stud welding device	The gun is approved for operation on the following SOYER® stud welding device: • BMS-9 ACCU
Weight	2.3 kg
Subject to technical changes	

8.2 Cleaning of the stud welding gun

On a regular basis, remove slag and welding spatters from the gun and the support tube using a suitable tool.

The frequency of cleaning depends on the operating conditions of the stud welding gun.

⚠ CAUTION

Risk of injury during cleaning

Welding spatters and slag can be sharp-edged.

- Wear protective gloves when cleaning.
- Please switch off or disconnect the stud welding device before cleaning the stud welding gun.

We recommend the use of SOYER® separating spray in order to prevent impurities from welding spatters and slag and to simplify the cleaning process.

9. Description of the stud chuck

In principle, every welding gun is provided with a stud chuck that matches the welding stud. Adjustable stud chucks must be set to the corresponding stud length.

9.1 Adjusting and inserting the adjustable stud chucks

Adjustable stud chucks must be adjusted to the length of the welding stud and, if necessary, to the gun size.

The standard stud chuck can hold studs with a length of up to 35 mm.

The adjustment of the stud chuck is shown using the example of the PS-9 gun. The adjustment is carried out in the same way for other gun types.

For welding guns with a short housing (e. g. PS-1K or PS-9K ACCU), it may be necessary to shorten the stop screw of longer welding studs.

When the adjusting screw is too long, the stud chuck cannot be fully plugged into the gun or the stud lift cannot be properly executed during welding.

Adjusting the stud chuck

Adjusting an adjustable stud chuck

Step 1:	Select the stud chuck according to the required stud diameter.
Step 2:	Insert the stud into the stud chuck. 

Adjusting an adjustable stud chuck

Step 3:	Adjust the stop screw so that the top of the flange of the stud sits between 1.5 mm and 3 mm above the stud chuck when it touches the screw. 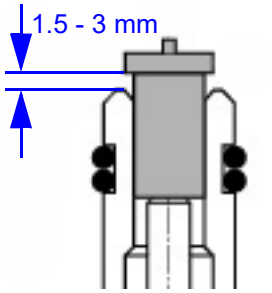 
Step 4:	Fix the stop screw with the lock nut. 
The adjustment is complete.	

Installation of the stud chuck

The installation of the stud chuck is shown using the example of the PS-9 gun. The installation of the stud chuck into other gun types is carried out in the same way.

Installation of the adjustable stud chuck.

Step 1:	**WARNING** **Switch off the stud welding device when the gun is connected to it.**
Step 2:	Set the stud chuck to the required stud.
Step 3:	Remove the gun support tube. **It is not mandatory to remove the support tube, however this makes use easier.** 

Installation of the adjustable stud chuck.

Step 4:	Undo the union nut	
Step 5:	If there is still a stud chuck in the gun, remove it.	
Step 6:	Slide the stud chuck up to the stop into the spring piston of the gun.	
Step 7:	Hand-tighten the union nut.	
Step 8:	Plug the support tube onto the gun.	

Installation of the adjustable stud chuck.

Step 9:	Insert a stud and check the stud protrusion. The stud / stud flange must protrude 1.5 - 3 mm from the support tube. If applicable, correct the setting of the stud chuck (see chapter “ Adjusting the stud chuck” on page 35).	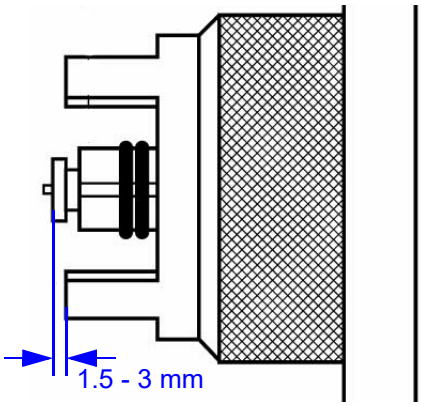
The assembly is complete.		

10. Setup and connection

10.1 Requirements for the installation location

The installation location for the stud welding device must be clean and dry. Observe the permissible temperatures in chapter “7.4 Technical data of the BMS-9 ACCU stud welding device” on page 28. Ensure that ventilation for the stud welding device is sufficient. Do not install the stud welding device in an unventilated room. There is a danger of overheating.

Ensure that the installation surface is flat, clean and stable.

The installation location and workplace must comply with legal requirements.

Ensure that the installation location has a good accessibility for maintenance work.

Make sure that the stud welding device cannot be soiled by dust (especially metal dust or chips) caused by work in the immediate surroundings (e.g. grinding work).

DANGER

Danger from humid operation site or mobile use

There is a danger of electrocution when operating the stud welding device in a humid environment.

- The stud welding device should only be operated in a dry environment.
- The battery charger should only be operated stationary and in closed and dry rooms. Mobile use is not permissible.

CAUTION

Danger from welding vapours

Vapours that are dangerous to health may occur, depending on the material of the workpiece and/or the welding stud.

- Ensure suitable suction of welding vapours, if necessary.

10.2 Connection of the stud welding device and the stud welding guns

10.2.1 Power supply

The BMS-9 ACCU stud welding device is operated exclusively by a battery. For the use of the battery, please observe chapter “7.3 Charging and inserting the battery” on page 24.

10.2.2 Switching the device on and off

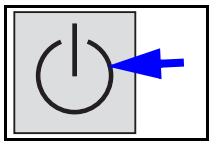

Use the power button to switch the stud welding device on or off.

- Switching on the device: Push button once briefly.
- Switching off the device: Push button once briefly.
- Switching off the device if the device is in standby mode: Push button twice briefly (the device switches to normal operation first and then off).

Ensure that the stud welding device cannot be switched on and used by unauthorised persons.

10.2.3 Connecting the earth cable

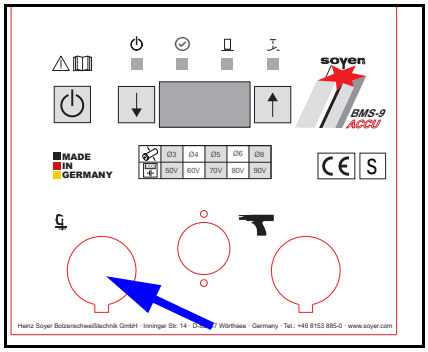

A secure earth connection must be established between the workpiece onto which the studs are welded and the stud welding device.

Insert the earth cable into the socket and turn the plug to the right up to the stop.

Then connect the earth cable to the workpiece (ensure a conductive connection).

Then attach the earth clamps to the workpiece so that the welding gun is positioned in the centre of the connecting line of the two earth clamps. This guarantees a symmetrical current distribution around the stud as well as good welding results.

Difficult areas are weldings on the edge of the workpiece or great inhomogeneities in material thickness, i.e. the sheet thickness varies by a few millimetres or additional material is welded or riveted to the material. This also includes stud welding on vertical sections.

In order to achieve good welding results, carry out several test weldings under different conditions. Simply change the position of the earth clamps or turn the welding gun, for example.

Blow effect

Blow effect due to earth connection or workpiece geometry

Blow effect	Explanation
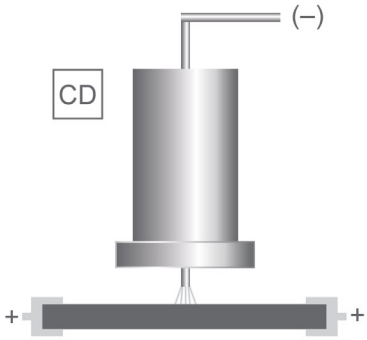	Symmetrical earth connection Ideal condition, stud is located in the centre of the two earth connections.
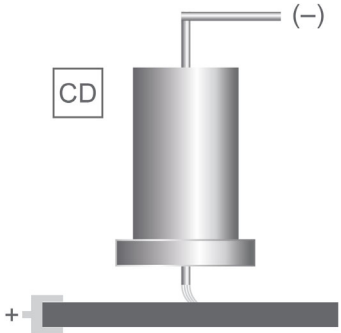	Asymmetrical earth connection The arc is deflected to the side where there is a lower current density.
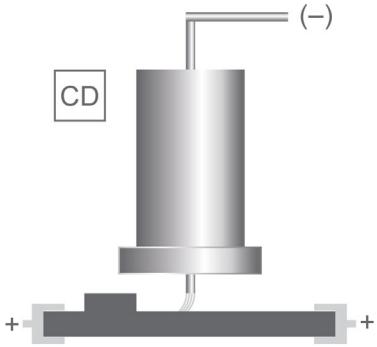	Workpiece geometry Additional workpiece masses disturb the arc symmetry.

10.2.4 Connecting the stud welding gun

Only use the welding guns approved by the manufacturer. See chapter “7.5 Permitted stud welding guns” on page 30.

Plug the welding cable into the socket (a) and turn the plug to the right up to the stop.

Plug the control cable into the control cable socket (b) and tighten the union nut.

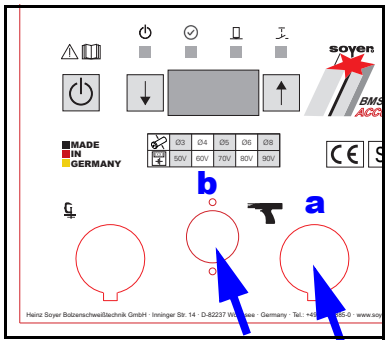

11. Settings

The stud welding device and the stud welding gun must be matched and adjusted for the respective work.

11.1 Adjusting the charging voltage on the stud welding device

In the following, it is described how the charging voltage is adjusted.

In order to achieve an optimal stud welding result, carrying out some test welds with different settings is necessary.

The charging voltage to be set on the stud welding device depends, among others, on the following influencing factors:

- Material of the workpiece
- Thickness of the workpiece
- Material of the welding stud
- Diameter of the welding stud

At the stud welding device you find a support table with reference values for charging voltages for the corresponding stud diameter.

The support table is intended to determine a suggested value for a charging voltage which is approximately required to weld a stud with the selected diameter according to experience. This value serves as a guideline and normally has to be adjusted based on test welds using the arrow keys.

The value which is set using the arrow keys is saved and remains unchanged until a new value is entered even if the device is switched off.

Adjusting the charging voltage

Step 1:	Connect the device as described in chapter “10.2 Connection of the stud welding device and the stud welding guns” on page 40.
Step 2:	Use the table at the stud welding device to determine the required charging voltage for the relevant stud diameter. 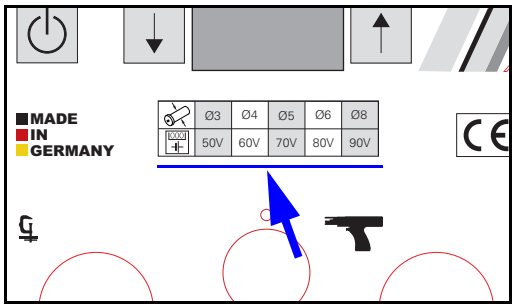

Adjusting the charging voltage

Step 3:	On the display, a charging voltage value will be displayed in [V]. Use the arrow keys ↑↓ to increase or decrease the value, if required. 
The charging voltage is adjusted. **The adjusted value is saved and remains unchanged even after switching the device off and back on again.**	

12. Welding operation

In the following, it is described how weldings are carried out and how possible welding errors can be avoided.

12.1 Carrying out welding

In the following, it is described how weldings are carried out with a stud welding gun.

DANGER

Danger from incorrect operation

During stud welding, incorrect operation of the devices may cause many dangers.

- Before using the stud welding device, see chapter “2. Important safety instructions” on page 8.
- If you have any problems understanding the operating instructions, contact the manufacturer, Soyer.

Carrying out welding

Step 1:	Before welding, see chapter “2. Important safety instructions” on page 8
Step 2:	Connect the gun to the stud welding device (see chapter “10.2 Connection of the stud welding device and the stud welding guns” on page 40).
Step 3:	Insert the appropriate stud chuck and a welding stud (see chapter “8. Description of the PS-9K ACCU stud welding gun” on page 32 and chapter “9. Description of the stud chuck” on page 35). Only use SOYER® welding studs.
Step 4:	Check the charging voltage (see chapter chapter “11.1 Adjusting the charging voltage on the stud welding device” on page 43).
Step 5:	Ensure that the welding points on the stud and workpiece are metallically bright.

Carrying out welding

Step 6:	Press the gun onto the workpiece at an angle of 90 degrees.  When using a contact gun, press it firmly against the spring force.
Step 7:	Push the release button of the gun. *Welding is carried out.* **During the welding process, hold the gun steadily and only remove it vertically from the welded stud after the welding process is finished. By doing so, widening or damaging the stud chuck is avoided.**
The welding process is finished.	

12.2 Notes on checking the quality of the weld

If the SOYER® stud welding equipment is handled correctly and the correct materials are selected, the strength of the welding joint (welding zone) is always higher than the strength of the stud or the base material.

In practice, the following production control tests have proved successful:

- Visual inspection
- Bend test

For further information, see standard:

DIN EN ISO 14555 Arc stud welding of metallic materials or Technical Bulletin DVS 0904 Instruction for practice - Arc stud welding.

12.2.1 Visual inspection

The visual inspection serves as a rough check for major defects. The uniformity of the weld is assessed.

The following table serves as an aid for the assessment of the welding result:

Visual inspection

Welding image	Note
	Good welding joint. Optimum setting. Even, bright and closed welding bead.
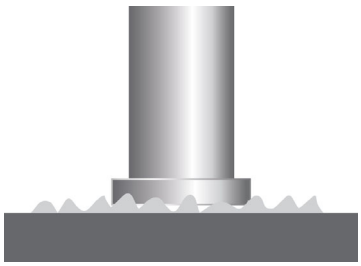	Poor welding joint, e.g. because the welding energy is too high or the immersion distance / lift is too small.
	Poor welding joint, e.g. because the welding energy is too low or the lift is too short. The welding bead is weak and unevenly formed.
	Poor welding joint, e.g. due to a blow effect or a welding gun that was shaken or applied at a slant. The stud flange is not welded completely and has visible imperfections. Undercuts are visible.

12.3 Welding defects and their causes

In the following, the most common welding errors, possible causes and troubleshooting are described.

Please contact Heinz Soyer Bolzenschweißtechnik GmbH if a problem cannot be solved.

Error	Possible cause and troubleshooting
Device does not weld, no sparking	Stud welding device is not switched on or battery is empty. • When switching on the device, the red indicator light “Ready” must light up. • Charge battery, if required.
	Welding points or earth connection points on the workpiece are not metallically bright. The LED display “Stud on workpiece” does not light up (see chapter “7.2.1 Displaying the operating states” on page 22). • Prepare the workpiece or stud. Grind connection points to a bright metal finish.
Scorched stud thread	Stud is too loose in the stud chuck. • Press or retighten the stud chuck.
	Stud chuck is worn. • Exchange stud chuck.
Varying welding results with unchanged settings	Stud is too loose or not fully inserted into the stud chuck. • Push in the stud until stop. • If necessary, exchange the stud chuck.
	Welding studs manufactured inaccurately. • Only use SOYER® welding studs.
Stud is not welded to the whole flange surface, strength of the welding is insufficient	Contamination on the surface of the workpiece is too heavy. • Clean or grind the surface of the workpiece to a bright metal finish.
	The front surface of the welding stud is deformed. • Use new welding studs. • Only use SOYER® welding studs
	The welding gun was placed in tilted position. • Position the welding gun evenly.

12.4 Malfunctions with an error message

DANGER

Dangers during troubleshooting

During troubleshooting, various dangers may occur.

- All devices of Soyer Bolzenschweißtechnik GmbH must only be opened by personnel of Soyer or personnel authorised by Soyer.
- For troubleshooting, the device must be disconnected from the main power supply and secured against accidental switch-on. The battery of battery-operated devices must be removed.

When there is a stud welding device malfunction, an error message (code) appears on the display.

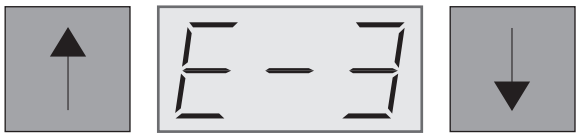

Error code	Description	Possible cause
E01	Battery is empty.	Charge or exchange battery.
E03	The thyristor is short-circuited.	The thyristor is defective, please contact our service.
E04	Excess temperature of the electronic equipment.	During high welding sequences, the device may be exposed to an increased ambient temperature (>45°C) or direct sunlight. The device does not start again, even if the temperature decreases. In this case, switch off and on again.
E05	Capacitors are not being charged.	• Gun not removed from stud after welding. • Welding capacitor faulty (leakage current). • Charging current source faulty.

13. Maintenance and repair

Maintenance and repair of the stud welding device and the stud welding guns should only be performed by Heinz Soyer Bolzenschweißtechnik GmbH or authorised specialists.

14. Service

If servicing is required, please contact:

Heinz Soyer Bolzenschweißtechnik GmbH

Inninger Straße 14

82237 Wörthsee

Phone: 0049-8153-885-0

Fax: 0049-8153-8030

Email: info@soyer.de

Please have the serial number ready during service requests.

Alternatively, you can also contact your respective Soyer agent. Contact information can be found on our website at

www.soyer.de or

www.soyer.com (English)

15. Warranty conditions

The warranty period for commercial or equal use is 12 months. If repair is required, we guarantee the correction of the defects at the Etterschlag plant. Wearing parts are excluded.

The warranty claim shall expire if damage is caused through improper operation, repairs or interventions are undertaken by unauthorised persons and accessories and spare parts are used that are not intended for our system.

When using welding studs from external manufacturers, we do not assume any warranty for proper function of the stud welder and the quality of the welding joint.

Heinz Soyer Bolzenschweißtechnik GmbH

Inninger Straße 14

82237 Wörthsee

Tel.: 0049-8153-885-0

Mail: info@soyer.de